BLIOTE

WWW.BLIOTE.COM

BLIOTE

FAUCET USING SPECIFICATION

BLIOTE

MAKE LIFE MORE CEREMONIAL

PARAMETER INFORMATION

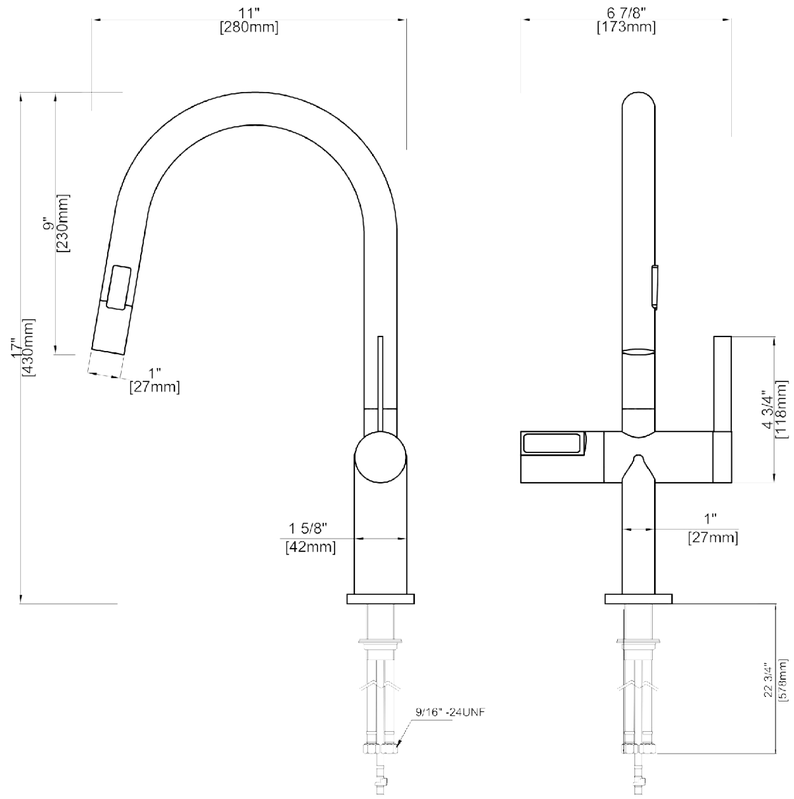

SKU	WEIGHT	COLOR
SLT-FCL-S4	1.8 KG	PLATING/GREY/BLACK

DIMENSIONS

HEIGHT:17"(430 MM) WIDTH:11"(280 MM) HANDLE: 4 3/4"(118 MM)

FEATURE	SELLING POINT
DUAL MODE WATER OUTLET	STREAM / SWEEP / BOOST

INSTALLATION INSTRUCTIONS

Prior to Installation:

- Make sure you have all necessary parts by checking the diagram andparts list. If any part is missing or damaged, please contact Customer Service for a replacement.
- Turn off the hot and cold water supply at the angle stops and turn on the old faucet to release any built up pressure. Remove existing faucet. Clean sink or countertop to remove any debris, plumber's putty, or silicone.
- Flush angle stops to release any debris prior to installation.
- Pre-drilled hole size requirement: 1 3/8"(min)
- Max countertop thickness: 1 3/4"

Tools Required

Adjustable Wrench

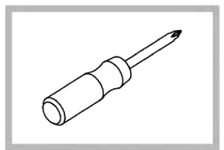
Phillips Screwdriver

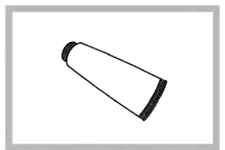
Silicone Sealant

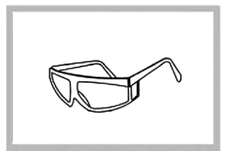
Safety Goggles

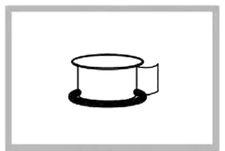
Pipe Tape

Diagram and Parts List

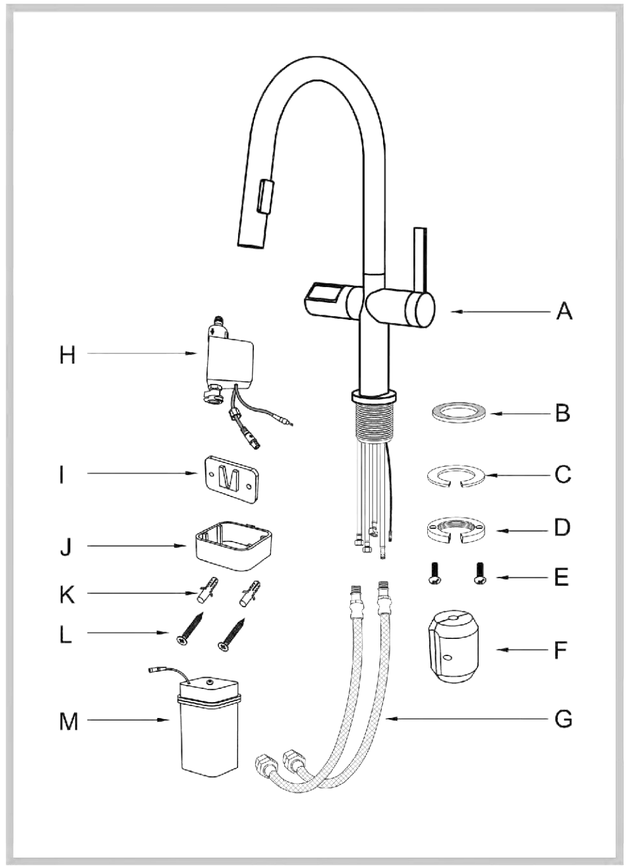

A. Faucet Body
B. Rubber Gasket
C. Matel Gasket
D. Mounting Nut
E. Mounting Screws
F. Gravity Hammer
G. Hot & Cold Water Pipes
H. Induction Controller
I. Wall Mount
J. Batteries Box Rack
K. Wall Anchor
L. Wall Anchor Sleeve
M. Batteries Box

Faucet Dimension

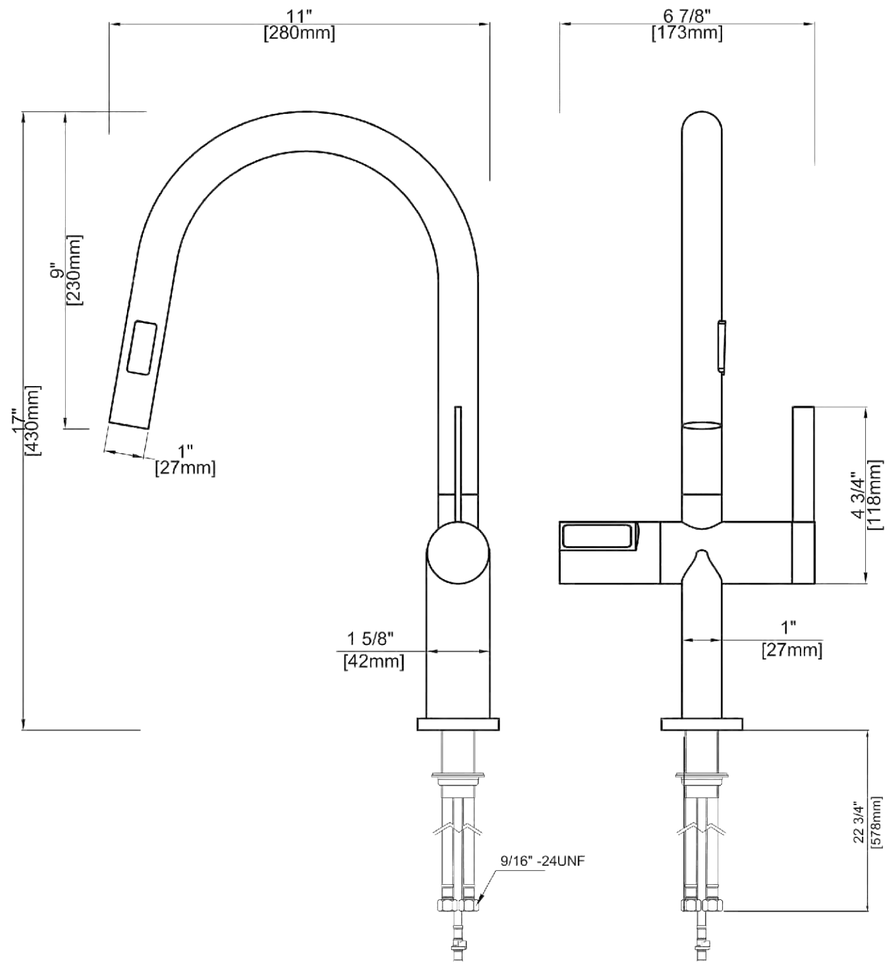

Installer Tip:

Shut off main water supply before installing new faucet.

Step 1. Remove mounting hardware

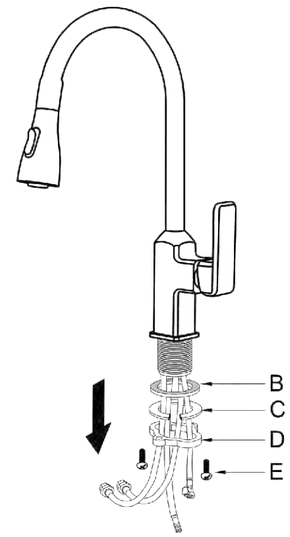

Shut off the water supply. Remove the old faucet. Clean the mounting surface. Remove mounting hardware (B~E) from the faucet.

Untie the rope of the gravity hammer as shown in the figure below.

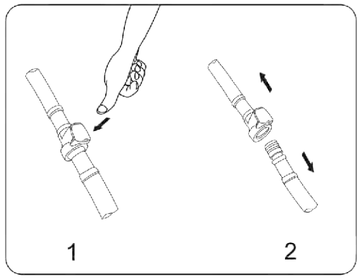

Step 2. Installing the faucet to the countertop

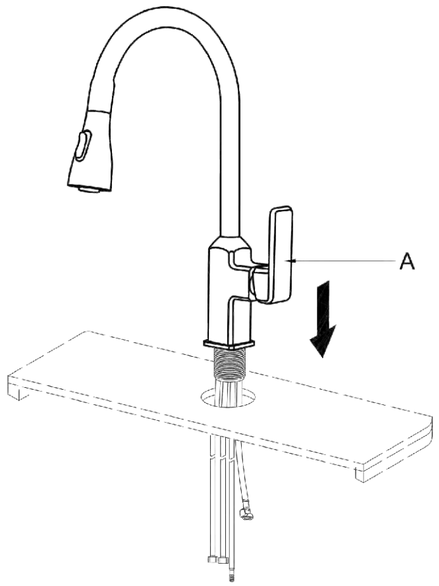

Insert faucet body (A) through the hole in the sink or the countertop.

Step 3. Install mounting hardware

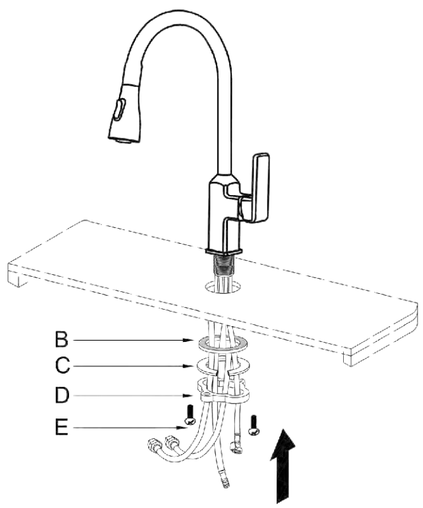

Pass the mounting hardwares (B~ E) through the water pipes in turn, install them on the faucet body and tighten.

Pass the mounting hardwares through the water pipes according to the figure below.

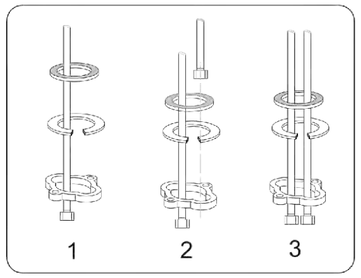

Step 4. Reattach the gravity hammer rope

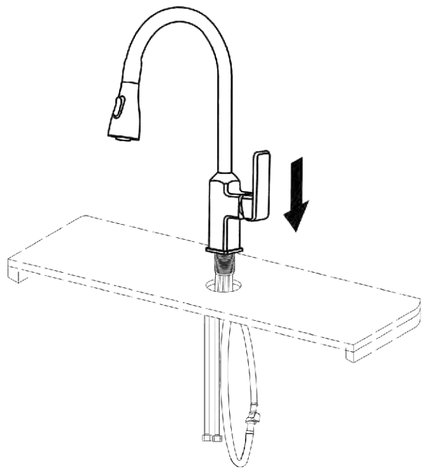

Reattach the gravity hammer rope according to the figure below.

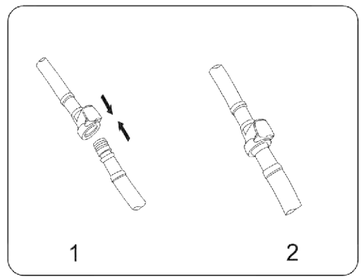

Step 5. Connect induction controller to the faucet

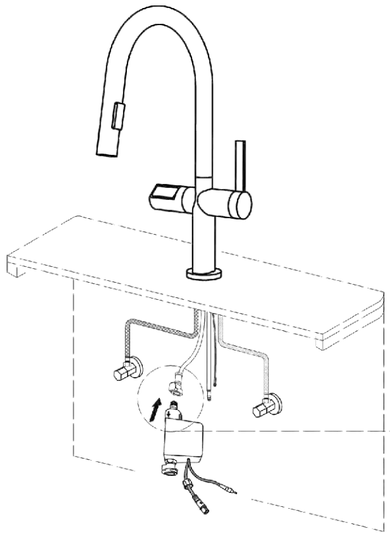

Connect one end of the induction controller to the corresponding link hole on the faucet, as shown in the diagram below.

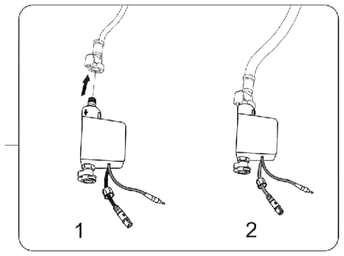

Step 6. Connect induction controller to the faucet

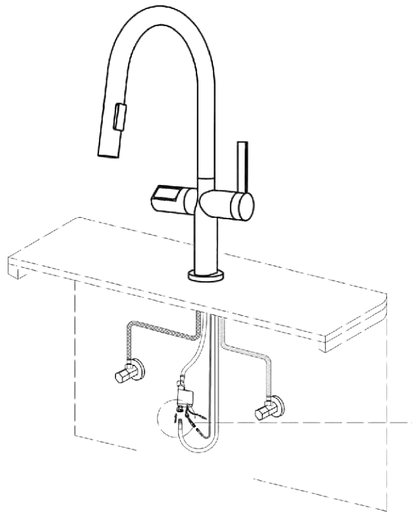

Connect the other end of the sensor to the faucet as well, just like the previous step.

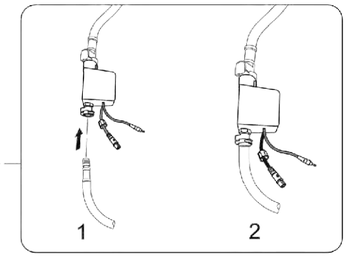

Step 7. Connect induction controller to the electric wire of faucet

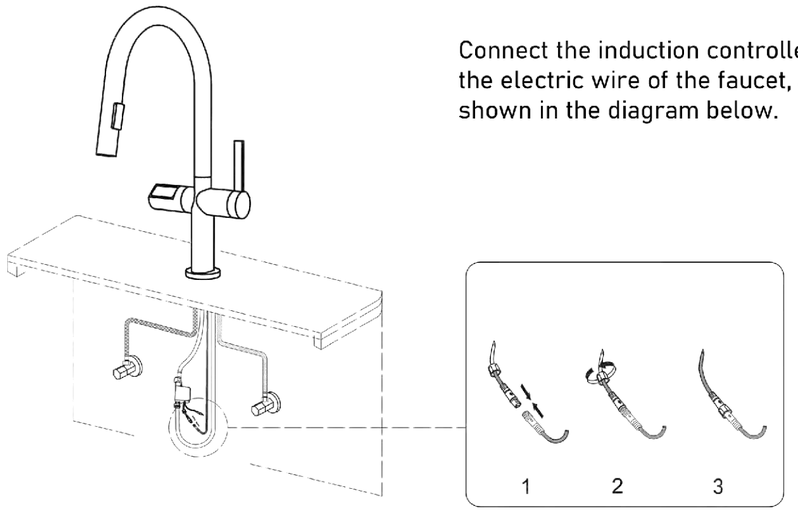

Connect the induction controller to the electric wire of the faucet, as shown in the diagram below.

Step 8. Install gravity hammer

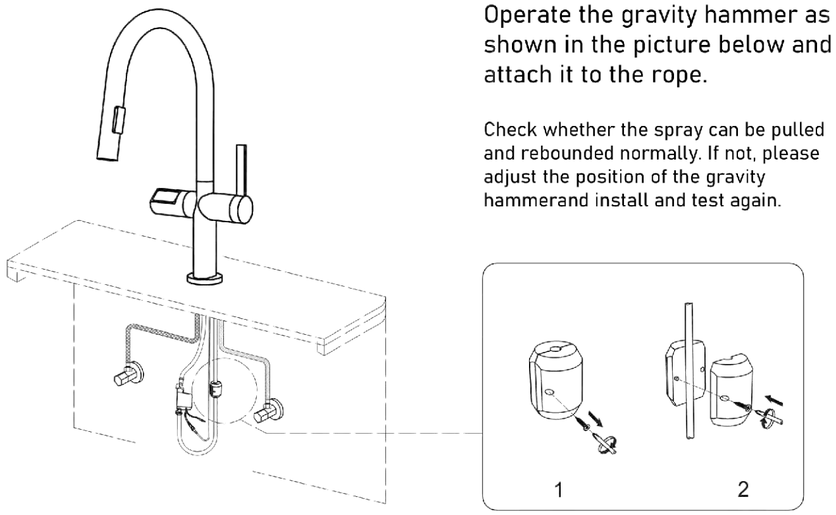

Operate the gravity hammer as shown in the picture below and attach it to the rope.

Check whether the spray can be pulled and rebounded normally. If not, please adjust the position of the gravity hammerand install and test again.

Step 9. Fix the wall mount

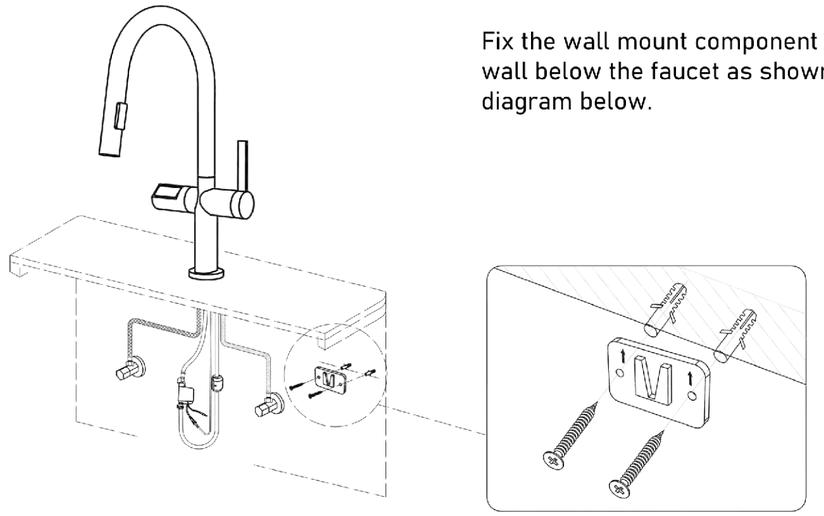

Fix the wall mount component to the wall below the faucet as shown in the diagram below.

Step 10. Fix batteries box rack

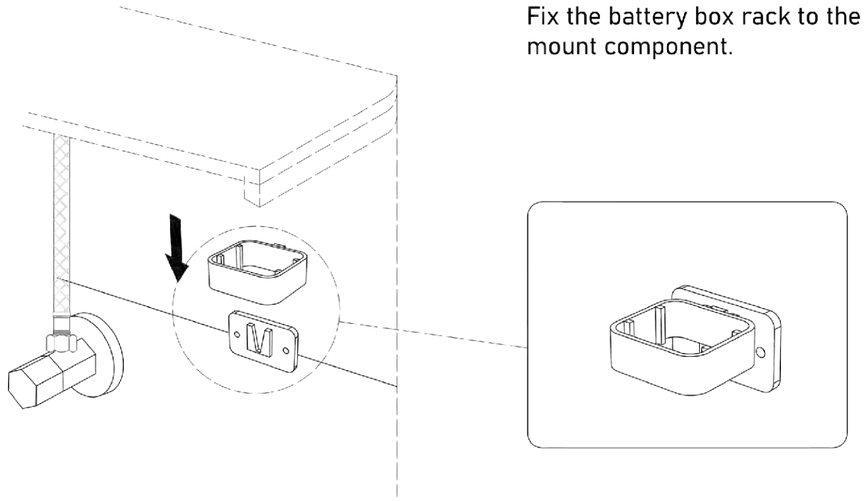

Fix the battery box rack to the wall mount component.

Step 11. Assemble the batteries box and insert the batteries

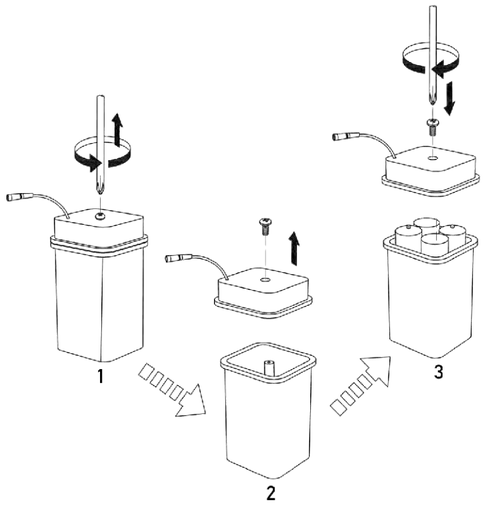

Follow the steps shown in figure 1-3, assemble the batteries box and install 4 AAA batteries.

Step 12. Insert batteries box to the rack

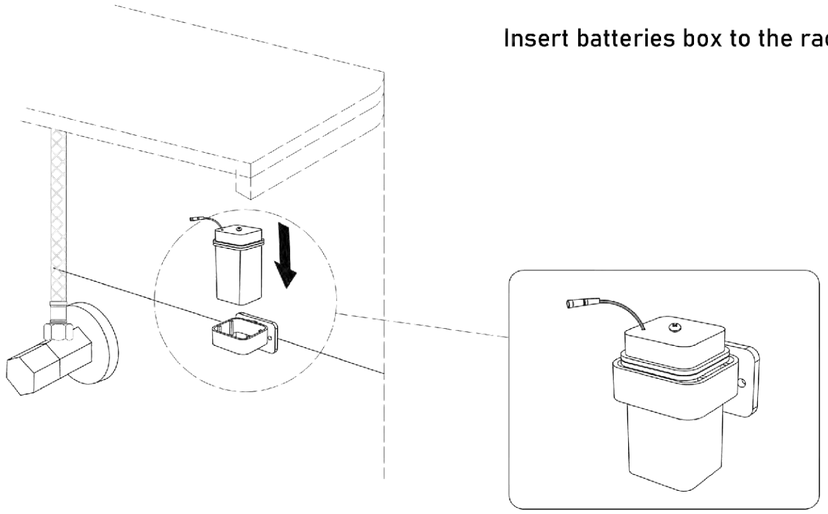

Insert batteries box to the rack.

Step 13. Connect induction controller to the batteries box

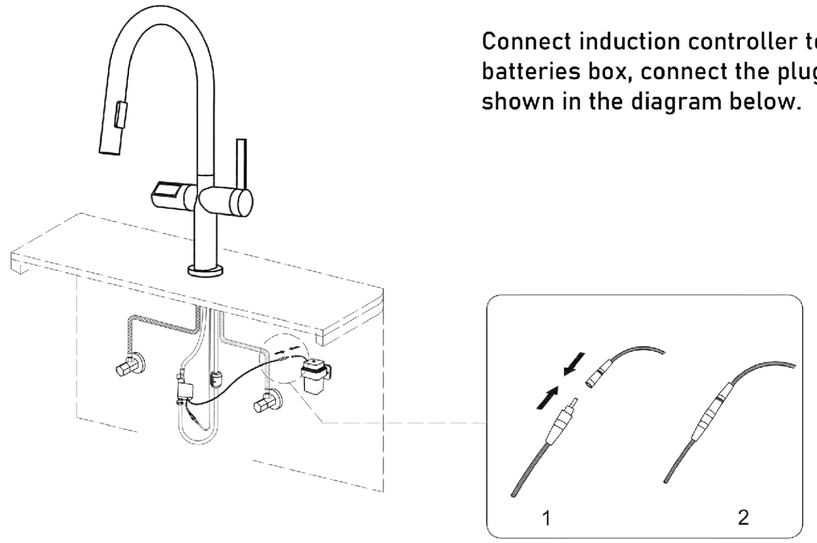

Connect induction controller to the batteries box, connect the plug as shown in the diagram below.

Step 14. Turn the faucet on and check for induction

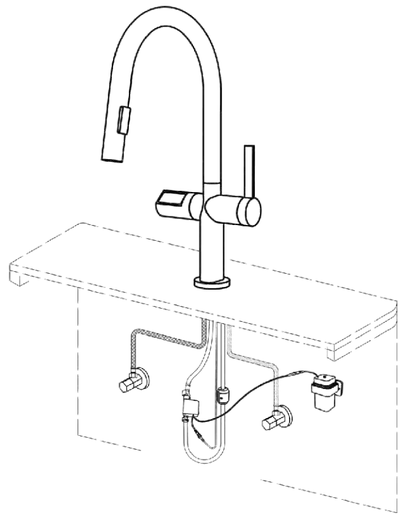

Turn on angle stops, turn the faucet on, check for induction and temprature displaying.

(DO NOT TURN FAUCET ON BEFORE THE INSTALLATION IS COMPLETE)